W-937 Wheel Balancer Parts Manual 17

WEAVER

EQUIPMENT

Please read this manual before operation

WHEEL BANLANCER
W-937

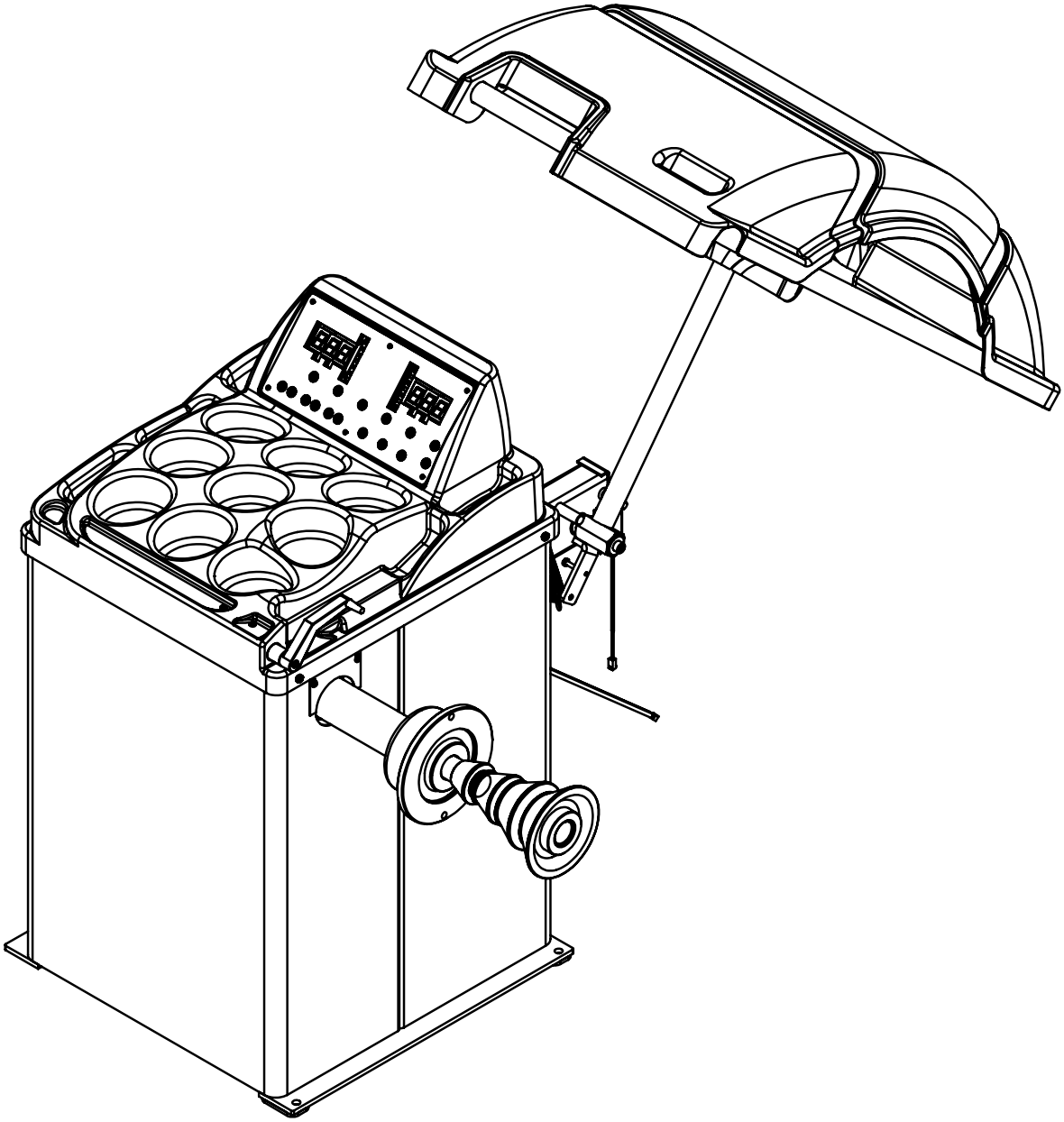

VER: 16A-01

List of Components

VER:16A-01

B-12-1000000

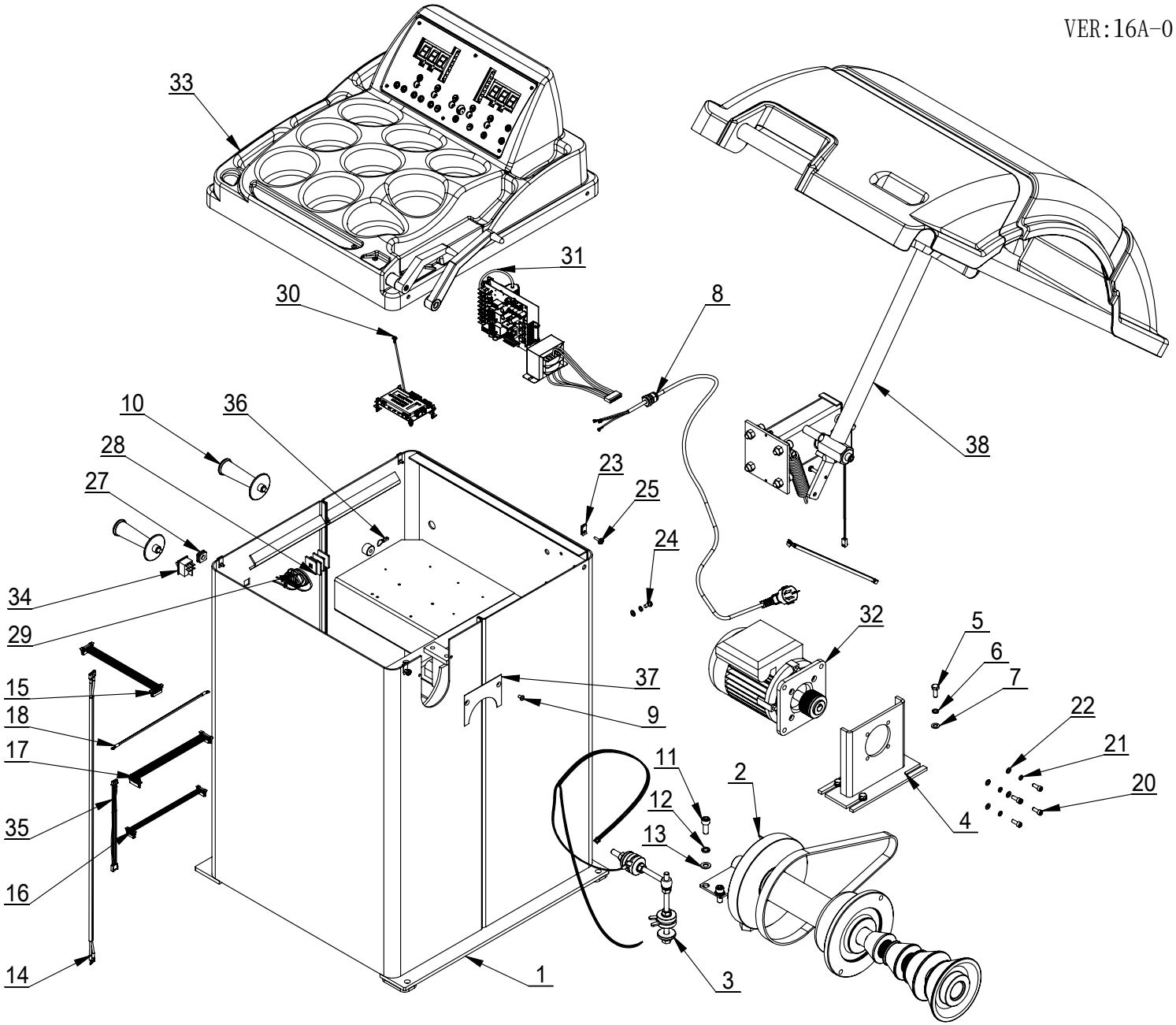

B-12-1000000

VER:16 A-01

ITEM	PART.No	DESCRIPTION.	QT.Y
1	B-12-1300000	910BODY	1
2	TB-P-0100000	BALANCER SPINDLE	1
3	TB-P-0110000	PRESS SENSOR ASSEMBLY	1
4	B-01-1000100	MOTOR HOLDER	1
5	GB5781-M8×20	HEXANGULAR BOLT	4
6	GB93-8	STANDARD SPRING WASHER	4
7	GB95-8	FLAT WASHER	4
8	TB-E-1000100	POWER CABLE ASSEMBLY	1
9	GB818-M5×8-H	CROSS PANHEAD SCREW	2
10	TB-S-0100009	CONE HANG HANDLE	2
11	GB70.1-M10×25	INNER HEXA CYLINDRICAL SCREW	4
12	GB93-10	STANDARD SPRING WASHER	4
13	GB95-10	FLAT WASHER	4
14	B-01-1008001	SWITCH CONNECTION LINE	1
15	B-01-1008002	Power board connections	1
16	B-01-1008003	DISPLAY PANEL CABLE	1
17	B-01-1008004	DISPLAY PANEL CABLE	1
18	B-01-1008005	EARTH WIRE	1
19	B-01-1000006	WEDGE BELT(940mm)	1
20	GB70.1-M6×16	INNER HEXA CYLINDRICAL SCREW	4
21	GB93-6	STANDARD SPRING WASHER	5
22	GB95-6	FLAT WASHER	5
23	B-53-1000007	NUT M4	4
24	GB818-M6×12-H	CROSS PANHEAD SCREW	1
25	B-53-1000006	SCREW M4	4
26	C-71-1000019	RUBBER GROMMET	1
27	C-54-1000015	STOP-UP	1
28	B-53-1000008	FIX PLATE	4
29	B-53-1000009	NYLON BELT	5
30	B-01-1000010	POWER BOARD	1
31	TB-E-1220000	POWER SUPPLY ASSEM	1
32	TB-E-9001110	MOTOR ASSEMBLY PART	1
33	B-12-1200000	WEIGHT TRAY ASSEM	1
34	TB-E-1001101	POWER SWITCH	1
35	B-01-1008006	BAORD LINE	1
36	TB-E-1006005	JUMPER No4	1
37	B-01-1000008	ASSESS HOLES COVER	1
38	TB-F-0100000	PROTECTIVE COVER ASSEMBLY	1:

B-01-1000010

REV16: A-01

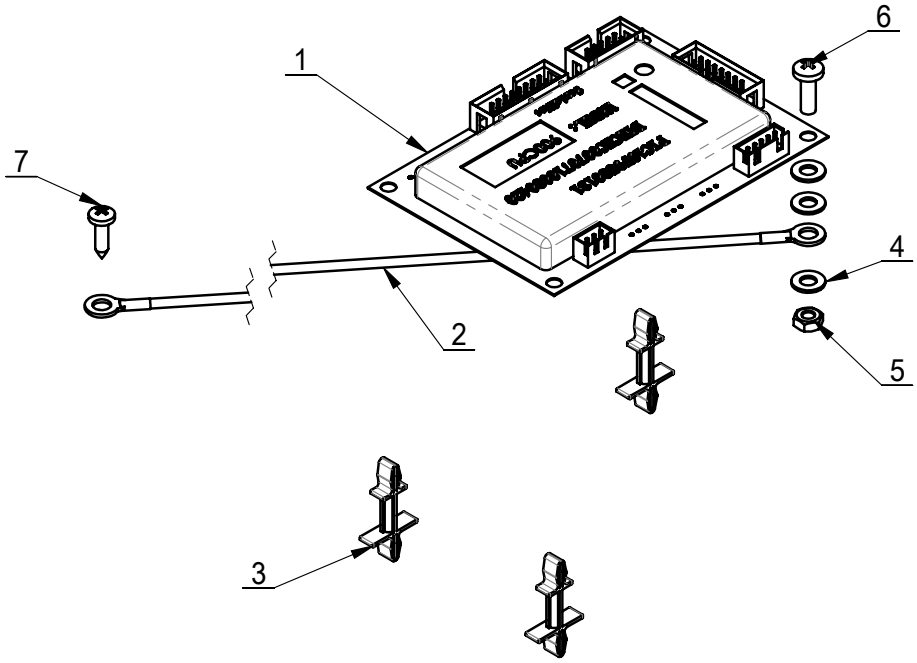

ITEM	PART.No	DESCRIPTION.	QT.Y
1	B-12-1000001	CPU-900	1
2	B-56-1500105	CPU LINE	1
3	TB-E-1211002	PLASTIC CLIPPER	3
4	GB95-4	FLAT WASHER	3
5	GB6170-M4	HEXANGULAR NUT 1-TYPE	1
6	GB818-M4×12-H	CROSS PANHEAD SCREW	1
7	GB845-ST3.5×13 H C	CROSS PANHEAD TAPPING SCREW	1

B-12-1200000

VER:16 A-01

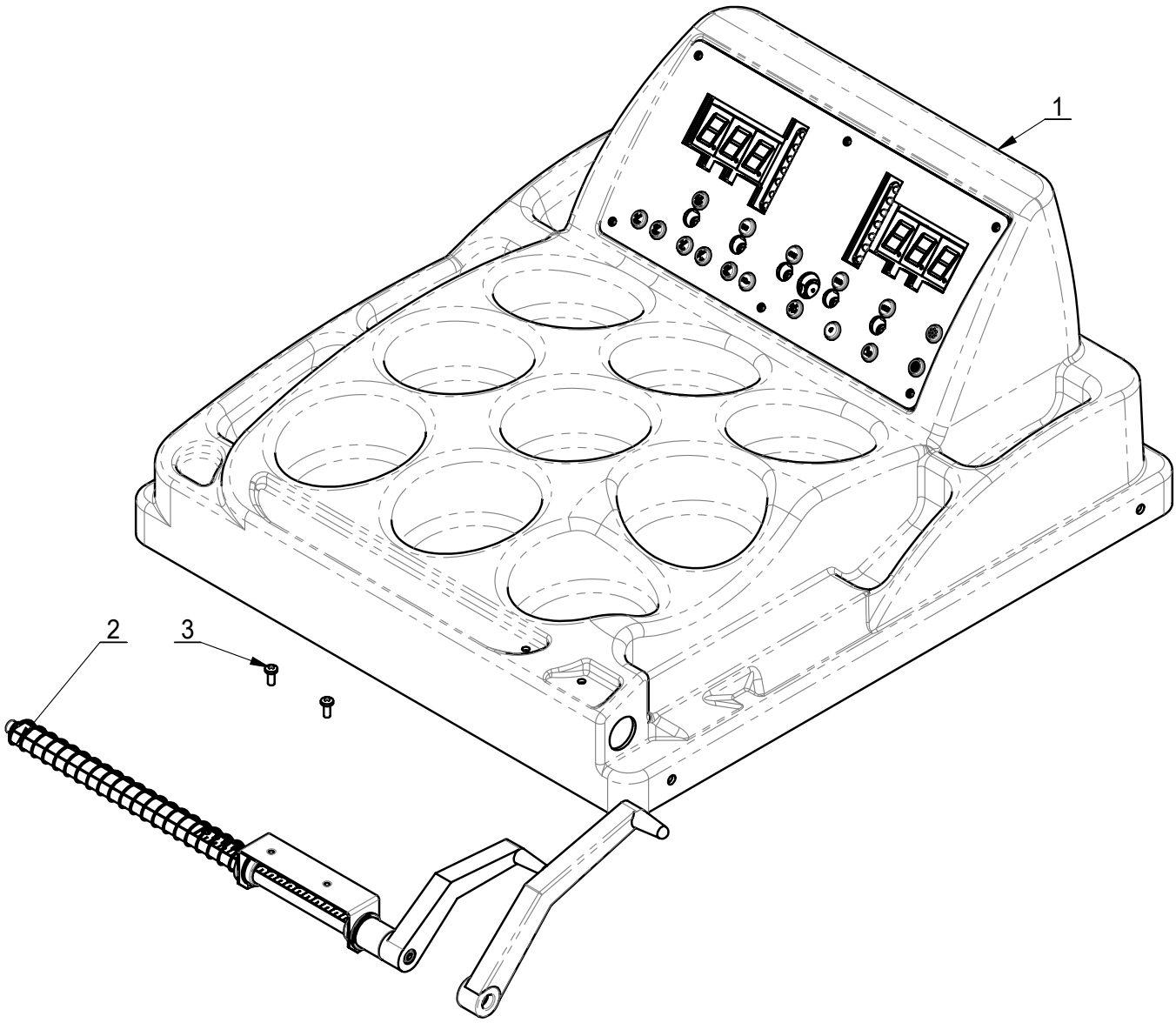

ITEM	PART.No	DESCRIPTION.	QT.Y
1	B-12-1210000	Lead weights cover the Ministry of installation	1
2	TB-L-0101000	SCALE ASSEMBLY	1
3	GB818-M5×12-H	CROSS PANHEAD SCREW	2

B-12-1210000

VER:16A-01

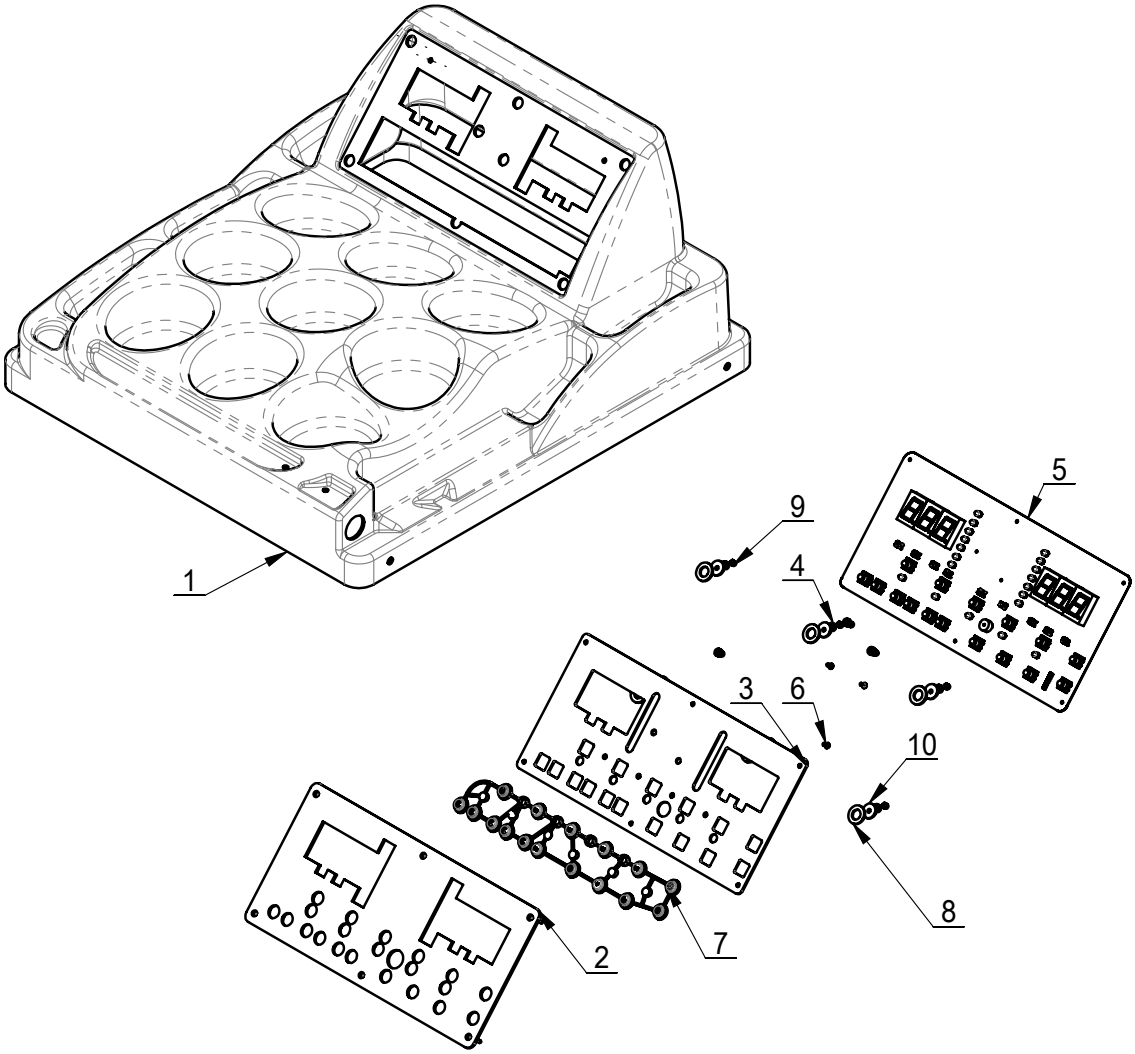

ITEM	PART.No	DESCRIPTION.	QT.Y
1	B-12-1210001	WEIGHT TRAY	1
2	B-12-1210003	IMD PANEL	1
3	B-12-1210004	WASHER	1
4	B-12-1210005	WASHER	8
5	B-12-1210002	DISPLAY PANEL	1
6	GB950-M3×8	CROSS ROUND HEAD WOOD SCREW	3
7	B-12-1210006	BUTTEN	1
8	GB95-10	FLAT WASHER	6
9	GB889.1-M3	1-TYPE PREVAILING TORQUE TYPE HEXAGON LOCK NUT	8
10	B-12-1210007	WASHER	6

TB-E-9001110

REVISION 16A-01

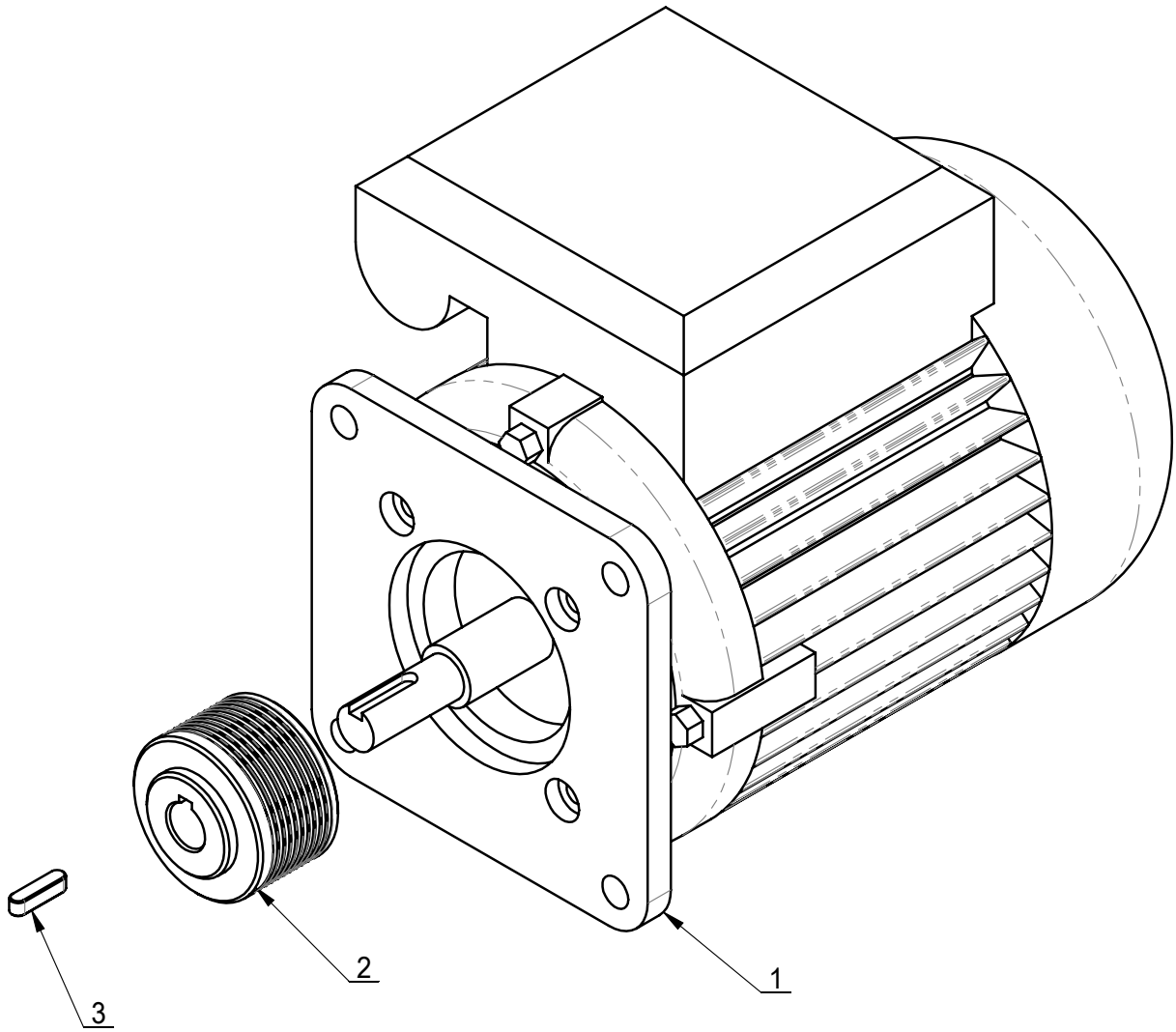

ITEM	PART.No	DESCRIPTION.	QT.Y
1	TB-E-9000110	MOTOR	1
2	B-53-1000003	MOTOR BELT PULLEY	1
3	GB1096-5×5×20	COMMON FLAT KEY	1

TB-E-1220000

VER:16A-01

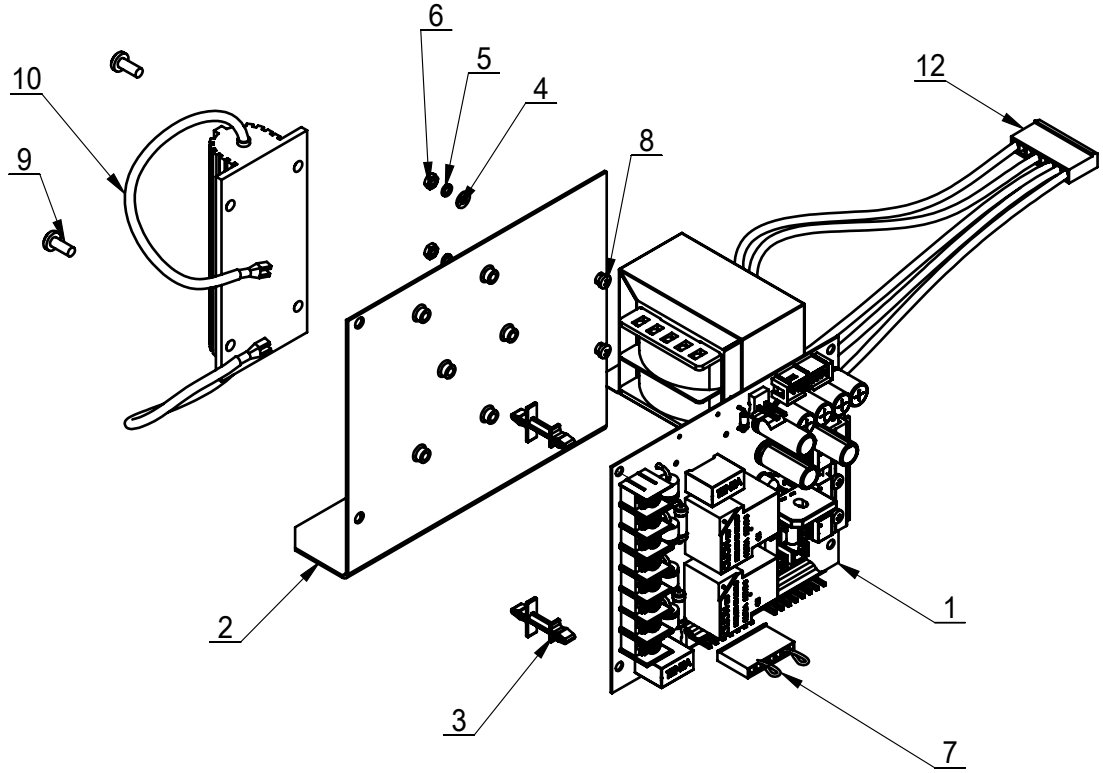

ITEM	PART.No	DESCRIPTION.	QT.Y
1	TB-E-1211100	POWER BOARD	1
2	TB-E-1211001	SUPPORT PLATE	1
3	TB-E-1211002	PLASTIC CLIPPER	2
4	GB95-3	FLAT WASHER	2
5	GB93-3	STANDARD SPRING WASHER	2
6	GB6170-M3	HEXANGULAR NUT 1-TYPE	2
7	TB-E-1006004	JUMPER No4	1
8	GB818-M3×8-H	CROSS PANHEAD SCREW	2
9	GB818-M4×10-H	CROSS PANHEAD SCREW	2
10	TB-E-1211268	RESISTANCE	1
11	GB845-ST3.5×13 H C	CROSS PANHEAD TAPPING SCREW	4
12	TB-E-1258110	EARTH WIRE	1

VER:16A-01

TB-P-0100000

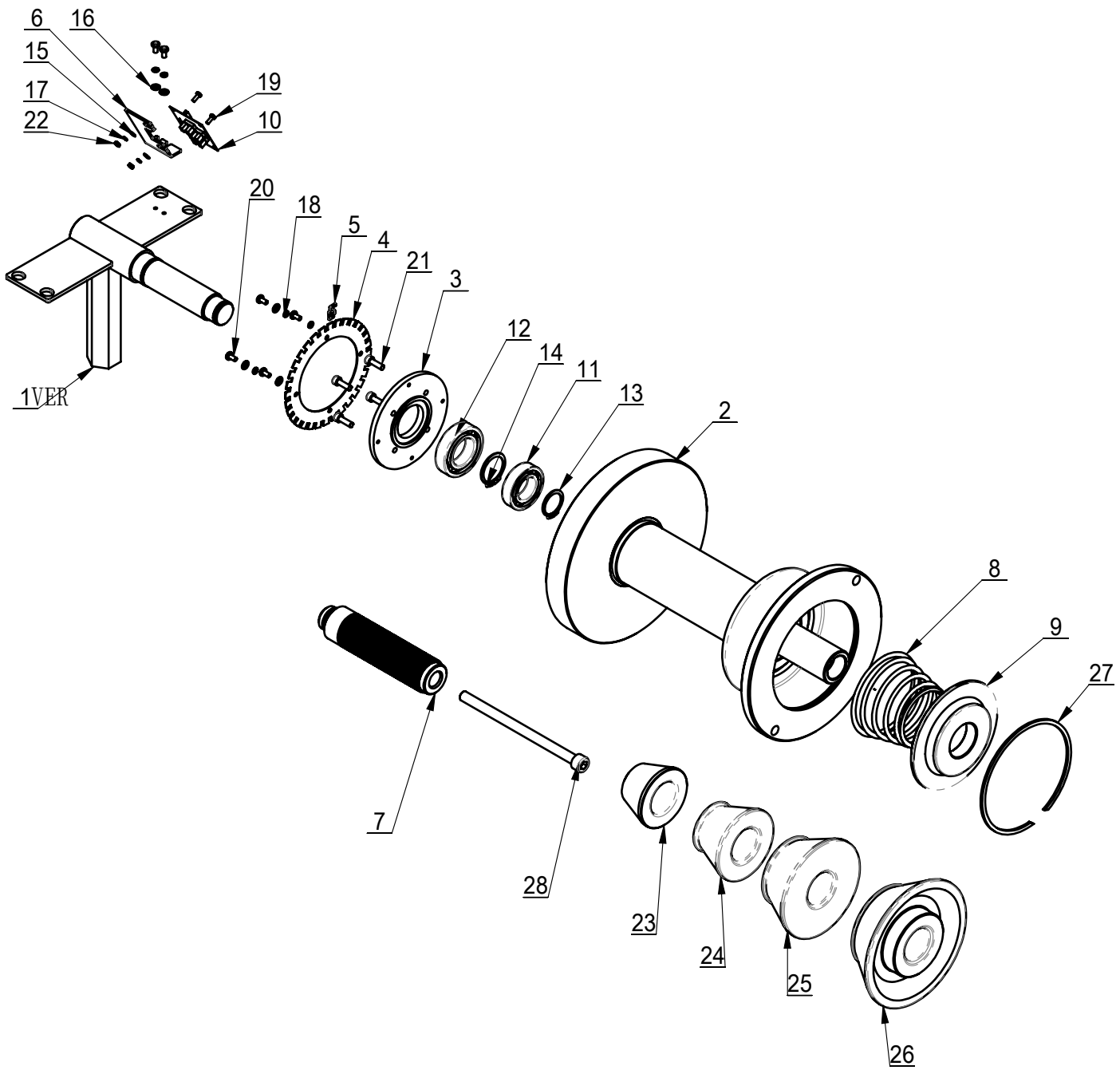

TB-P-0100000

VER: 16A-01

ITEM	PART.No	DESCRIPTION.	QT.Y
1	TB-P-0101000	FIXING SHAFT WELDING	1
2	TB-P-0102000	MAIN SHAFT WELDING	1
3	TB-P-0100001	BEARING PRESS HOUSING	1
4	TB-P-0100002	PHOTOELECTRIC SET	1
5	TB-P-0100003	PHOTOELECTRIC TOOTH	1
6	TB-P-0100004	ENCODER CELL PLATE	1
7	TB-P-0100007	THREADED SHAFT 36MM	1
8	TB-P-0100009	SPRING	1
9	TB-P-0100010	SPRING PRESS PLATE	1
10	TB-P-0100011	ANGLE SENSOR	1
11	GB276-6005	DEEP GROOVE BALL BEARINGS	1
12	GB276-6006	DEEP GROOVE BALL BEARINGS	1
13	GB894.2-25	SHAFT ELATIC RETAINING RING B-TYPE	1
14	GB894.2-30	SHAFT ELATIC RETAINING RING B-TYPE	1
15	GB95-3	FLAT WASHER	2
16	GB95-4	FLAT WASHER	5
17	GB93-3	STANDARD SPRING WASHER	2
18	GB93-4	STANDARD SPRING WASHER	6
19	GB818-M3×8-H	CROSS PANHEAD SCREW	2
20	GB818-M4×8-H	CROSS PANHEAD SCREW	6
21	GB70.1-M5×16	INNER HEXA CYLINDRICAL SCREW	4
22	GB6170-M3	HEXANGULAR NUT 1-TYPE	2
23	TB-P-0100031	36CONE 42-65	1
24	TB-P-0100032	36CONE 54-78	1
25	TB-P-0100033	36CONE 74-108	1
26	TB-P-0100034	36CONE 89-140	1
27	TB-P-0300009	ROLLAR	1
28	GB70.1-M10×160	INNER HEXA CYLINDRICAL SCREW	1

TB-F-0100000

VER:16 A-01

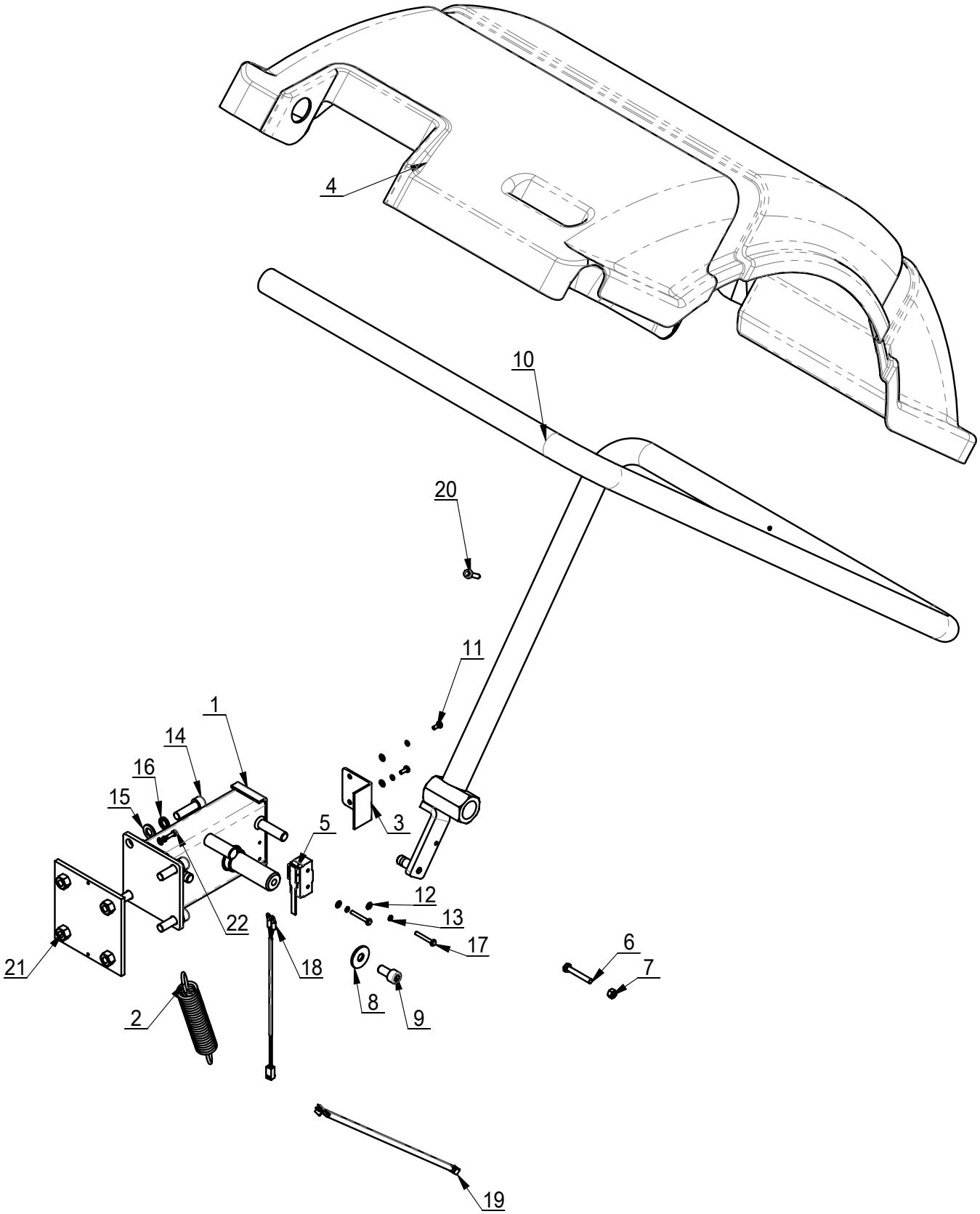

TB-F-0100000

VER: 16 A-01

ITEM	PART.No	DESCRIPTION.	QT.Y
1	TB-F-0110000	PROTECTIVE HOOD SUPPORT	1
2	TB-F-0100001	SUPPORT PIPE EXTENSION SPRING	1
3	TB-F-0100002	PROTECTIVE PLATE	1
4	TB-F-0100003	NEW STYLE HOOD	1
5	TB-F-0100004	HOOD SWITCH	1
6	GB5781-M6×40	HEXANGULAR BOLT	1
7	GB41-M6	HEXANGULAR NUT	1
8	GB96.1-10	LARGE WASHER A GRADE	1
9	GB70.1-M10×20	INNER HEXA CYLINDRICAL SCREW	1
10	TB-F-0120000	PROTECTIVE HOOD SUPPORTT	1
11	GB818-M4×10-H	CROSS PANHEAD SCREW	2
12	GB95-4	FLAT WASHER	6
13	GB93-4	STANDARD SPRING WASHER	6
14	GB70.1-M10×35	INNER HEXA CYLINDRICAL SCREW	4
15	GB95-10	FLAT WASHER	4
16	GB93-10	STANDARD SPRING WASHER	4
17	GB818-M4×30-H	CROSS PANHEAD SCREW	2
18	TB-F-0100009	TRAVEL SWITCH CONNECTION	1
19	TB-F-0100011	COVER HOOD CABLE B	1
20	GB16824.1-ST5.5×25 C	HEXA FLANGE TAPPING SCREW	1
21	TB-F-0130000	CONNECTING PLATE	1
22	GB70.1-M4×12	INNER HEXA CYLINDRICAL SCREW	2

VER 16A-01

TB-L-0101000

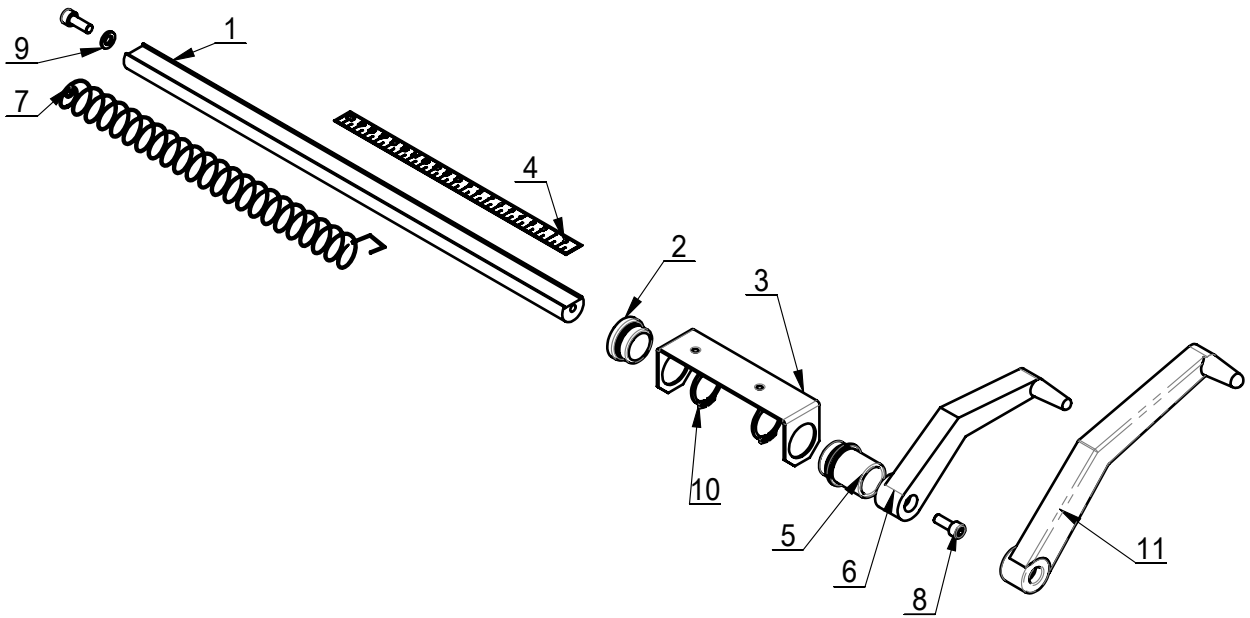

ITEM	PART.No	DESCRIPTION.	QT.Y
1	TB-L-0101001	SCALE ROD	1
2	TB-L-0101002	HARNESS	1
3	TB-L-0101003	SCALE HOLDER	1
4	TB-L-0101004	SCALE	1
5	TB-L-0101005	HARNESS	1
6	TB-L-0101006	SCALE HANDLE	1
7	TB-L-0101007	SPRING	1
8	GB70.1-M6×16	INNER HEXA CYLINDRICAL SCREW	2
9	GB95-6	FLAT WASHER	1
10	GB894.1-25	SHAFT ELATIC BIG RETAINING RING A-TYPE	2
11	TB-L-0100200	SCALE HANDLE	1

VER:16 A-01

TB-P-0110000

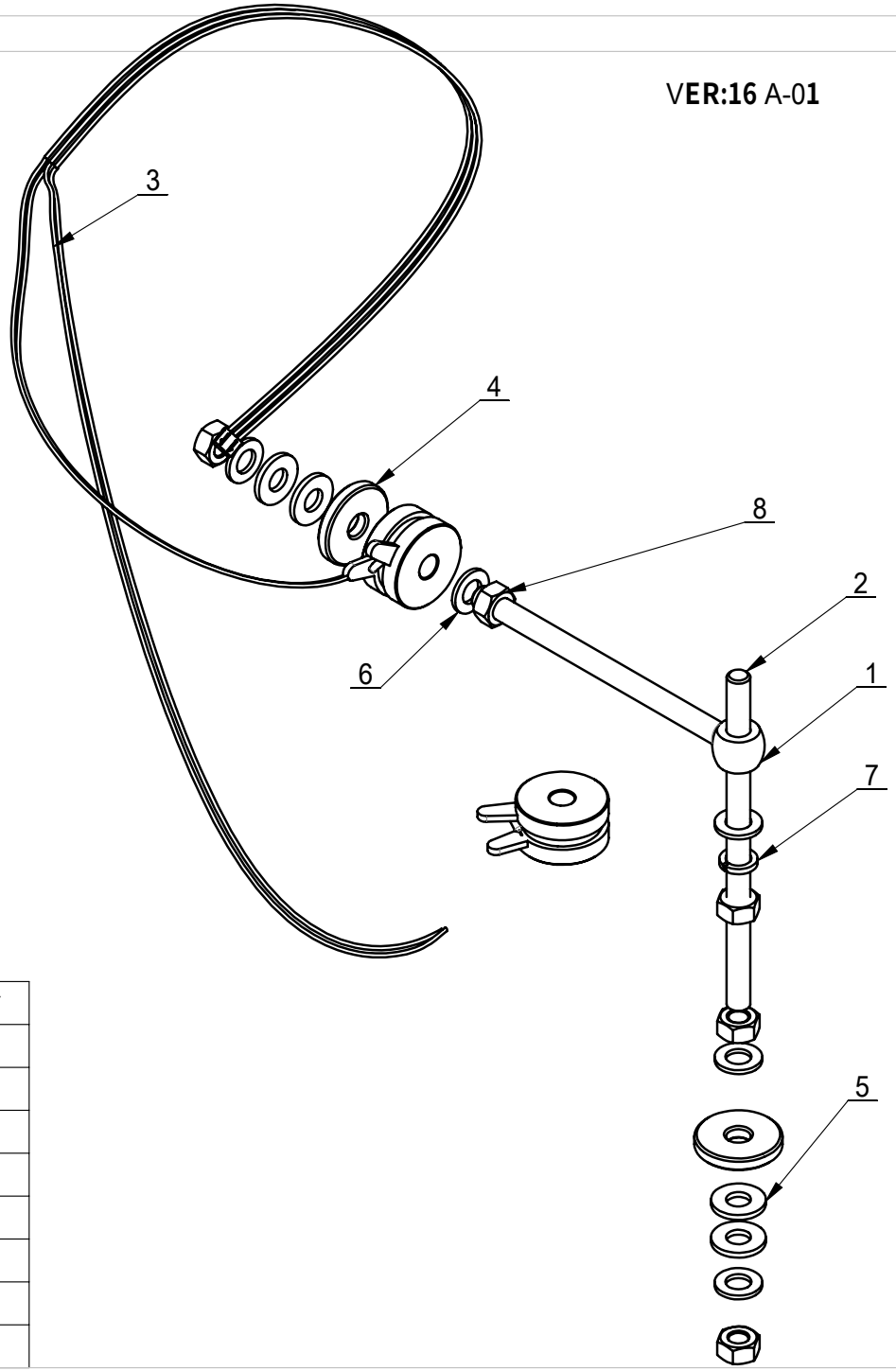

ITEM	PART.No	DESCRIPTION.	QT.Y
1	TB-P-0103000	GONG RINGS BOLT	1
2	TB-P-0100006	FULL BOTTON SCREW	1
3	TB-P-0100100	PIEZO ASSEMBLY	1
4	TB-P-0100005	PRESSING WASHER	2
5	DIN 6796 - 10	SPRING PIEZO WAHSER	4
6	GB95-10	FLAT WASHER	5
7	GB93-10	STANDARD SPRING WASHER	1
8	GB6170-M10	HEXANGULAR NUT 1-TYPE	5

TB-S-0100000

VER:16A-01

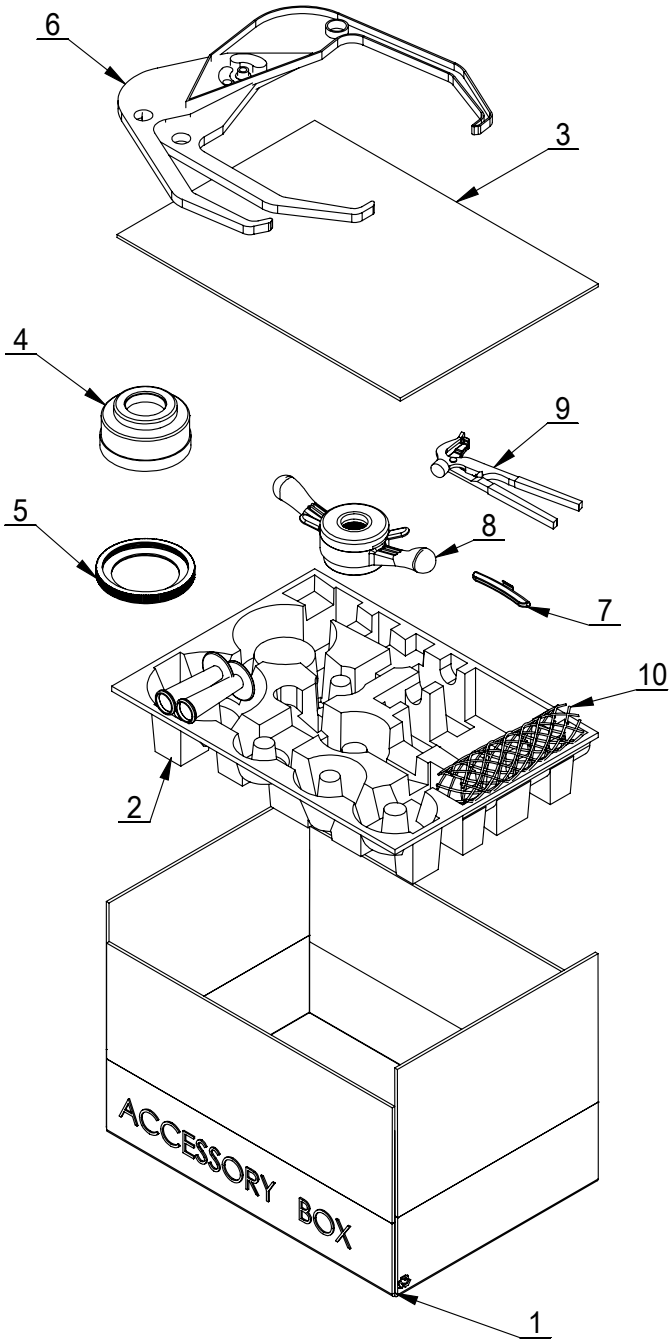

ITEM	PART NO.	Description.	QTY.
1	TB-S-0100006	ACCESSORY BOX	1
2	TB-S-0100007	TRAY	1
3	TB-S-0100008	ACCESSORY SPACE	1
4	TB-S-0100001	BOWL	1
5	TB-S-0100002	BOWL EDGE	1
6	TB-S-0100100	CALIPER ASSEMBLY	1
7	TB-S-0100003	WEIGHT(100g)	1
8	TB-K-0100000	QUICK NUT	1
9	TB-S-0100005	BALANCE HAMMAR	1
10	TB-S-0100012	Protect	1